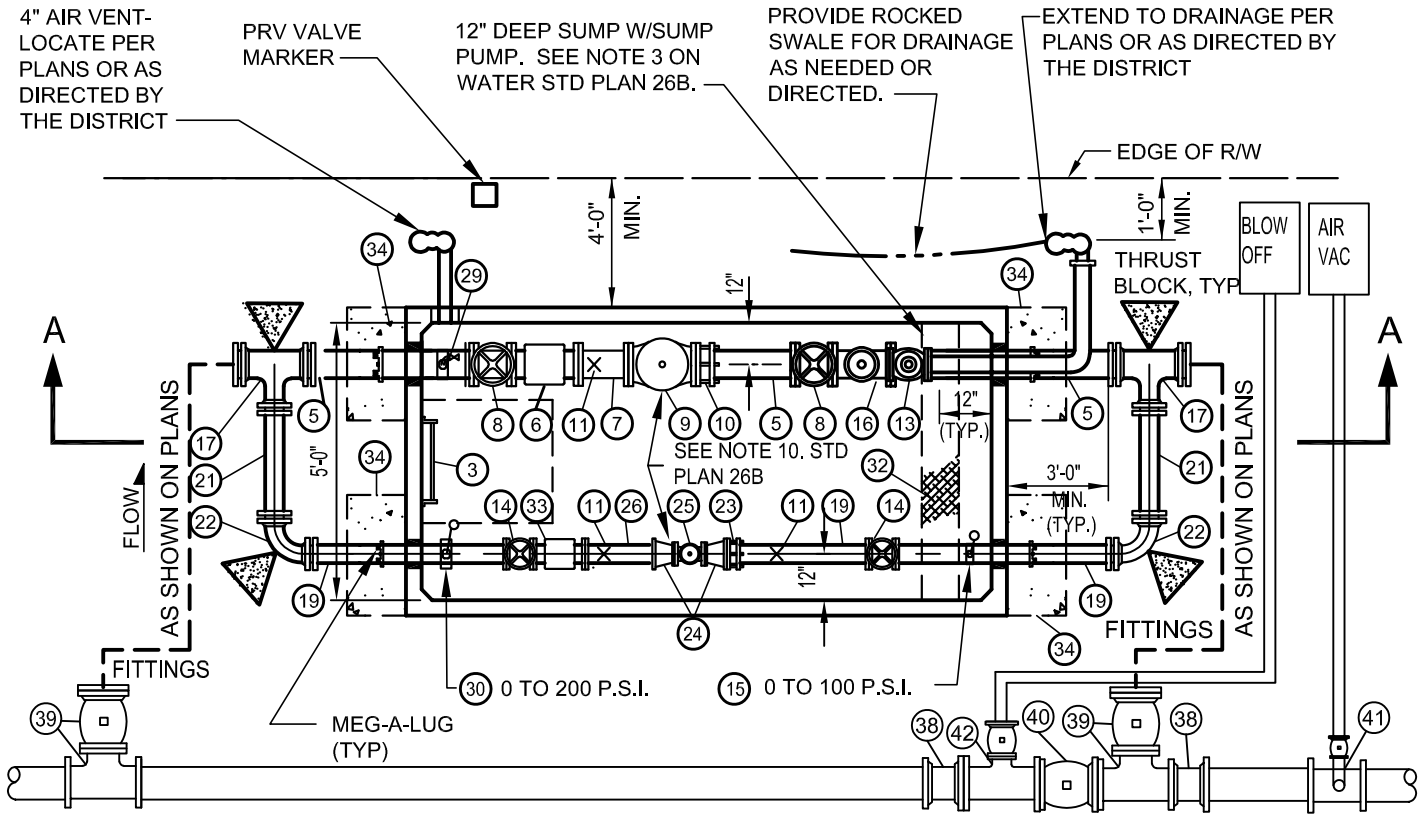

PLAN

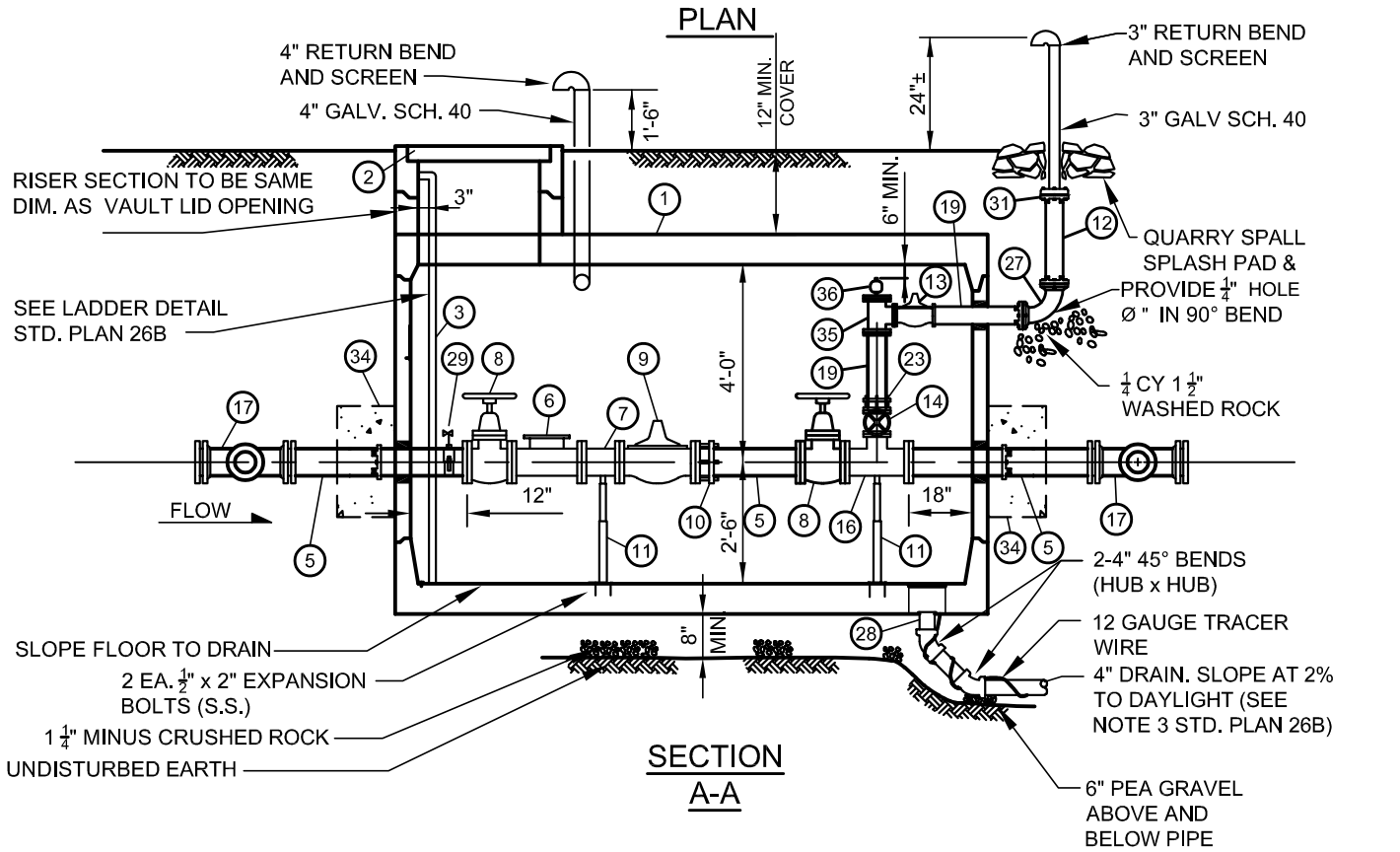

SECTION A-A

Woodinville Water District	PRESSURE REDUCING VALVE STATION	CHRISTIAN R. HOFFMAN, STATE OF WASHINGTON, 42295, REGISTERED PROFESSIONAL ENGINEER, EXPIRES: 11/21/2026	WATER STD. PLAN NO. 26 REVISION DATE 04/25